DEEPWATER SUBSEA LIFTING & DEPLOYMENT

DKB100A Offshore AHC Knuckle Boom Crane

A 100 t pedestal-mounted crane with full-rated active heave compensation for subsea deployment to 2,000 m, built to ABS.

100 t	6.5–40 m	2,100 tm	2,000 m
MAIN HOOK SWL	OUTREACH	LIFTING MOMENT	AHC WATER DEPTH
at 21 m outreach	Aux hook to 41 m	Nominal	Full 100 t rating at Hs 2.0 m

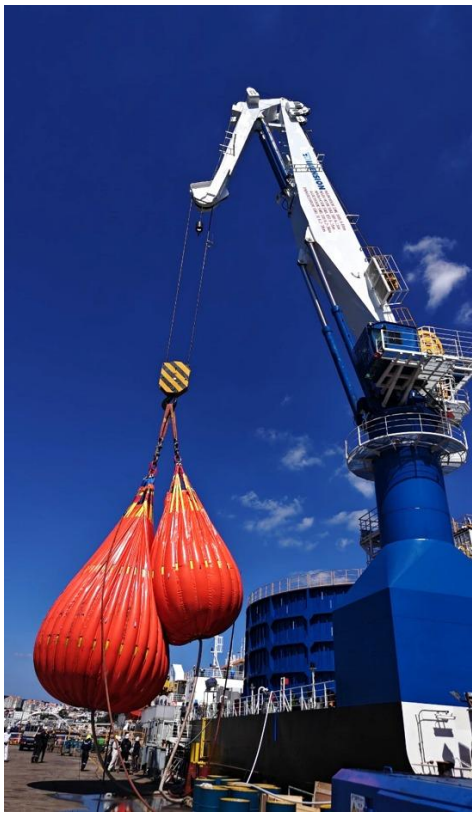

Overview

The Dimension DKB100A is a heavy-duty knuckle boom crane for deepwater subsea work and demanding offshore lifts. Its articulated boom and advanced hydraulic controls give the operator fine load control on deck and over the side.

Integrated Active Heave Compensation (AHC), driven by a motion reference unit, keeps the full 100 t rating in seas up to Hs 2.0 m, so heavy loads can be landed accurately on the seabed at 2,000 m.

Key Features

100 t at 21 m
2,100 tm lifting moment: 63 t at 30 m and 42 t at 40 m, plus a 10 t auxiliary hook rated for personnel lifting (3 t).

Full-rated AHC to 2,000 m
100 t at ±2 m stroke (Hs 2.0 m) and 60 t at ±3 m (Hs 3.0 m), with ±100 mm accuracy and nitrogen-accumulator assist.

Deepwater main winch
2,300 m of Ø64 mm rotation-resistant wire, hoisting at up to 80 m/min, on 1,600 kW of installed power.

Safety first
AOPS and MOPS overload protection safeguard personnel and equipment. Constant-tension mode included.

Built for offshore life
Climate-controlled cabin with real-time HMI, multi-layer marine coating, and fully enclosed hydraulic and electrical systems.

Class ready
Designed and certified to the ABS Guide for Certification of Lifting Appliances; DNV, BV, LR and API 2C available.

Applications

- **Subsea installation & construction** – deepwater manifolds, templates and wellhead equipment
- **Pipe & cable lay support** – handling tensioners, reels and deck gear
- **Offshore wind** – component transfer, foundation work and maintenance support
- **Ship-to-ship transfer** – cargo handling between vessels at sea
- **Oil & gas intervention** – platform supply, well intervention and deepwater retrieval

Technical Specification

DKB100A Offshore AHC Knuckle Boom Crane

PERFORMANCE & DESIGN

Crane type	Pedestal-mounted knuckle boom crane with AHC
Main hook SWL incl. wire	100 t @ 21 m 63 t @ 30 m · 50 t @ 35 m · 42 t @ 40 m
Auxiliary hook SWL	10 t @ 41 m (cargo) 3 t @ 41 m (personnel lifting)
Nominal lifting moment	2,100 tm
Slewing	360° continuous, 0–0.6 rpm
Luffing / knuckling time	120 s / 120 s
Column diameter	4.0 m (TBC)
Foundation height	5.0 m
Design codes	ABS CRC / API 2C DNV, BV, LR equivalent available

MAIN WINCH – HARBOUR / OFFSHORE LIFT

Winch type	Hydraulically driven
Drum capacity	2,300 m 2,000 m working depth
Main wire	Ø64 mm compacted, rotation resistant
Hoisting speed	0–80 m/min (0–50 t) 0–40 m/min (50–100 t)
Braking	Spring-applied multi-disc brake
Installed power	4 × 400 kW (1,600 kW)

ENVIRONMENTAL & OPERATING LIMITS

In-service wind	25 m/s
Out-of-service wind (stowed)	63 m/s
List / trim	5° / 2°
Offboard lift rating	Hs ≤ 2.0 m

MAIN WINCH – AHC PERFORMANCE (2,000 M)

Winch type	Active heave compensated, Lebus helix groove
Heave stroke	±2 m @ 100 t · ±3 m @ 60 t
Line velocity	Up to ~131 m/min (2.19 m/s)
AHC max. deviation	±100 mm
Scenario 1 – Hs 2.0 m	±2 m stroke, 100 t at boom tip, ≤ 88 m/min Net payload ≈ 65 t at 2,000 m
Scenario 2 – Hs 3.0 m	±3 m stroke, 60 t at boom tip, ≤ 131 m/min Net payload ≈ 25 t at 2,000 m
Period limits	Tz 8–12 s Below Tz 8 s: SWL × Tz/8, PLC limited
Nitrogen assist	Engages above 1,600 kW supply (Tz < 10 s)
Energy recovery	Optional, on request
Oil cooling	Vessel fresh-water circuit
Motion reference	Motion Reference Unit (MRU)

POWER, CONTROL & SAFETY

Electric supply	690 V, 3-phase, 60 Hz (TBC)
HPU motor drive	Soft starter / VFD
Control system	PLC with HMI, real-time diagnostics and performance data
Control positions	Operator cabin and local panel Radio remote control optional
Monitoring	Real-time load, wind and wave sensors
Operating modes	Constant tension (CT), AHC
Overload protection	AOPS and MOPS emergency release
Corrosion protection	Multi-layer offshore coating system

SWL includes wire weight. AHC ratings assume crane-tip RAO ≤ 1.0 and Tz 8–12 s on a 1,600 kW supply with nitrogen assist.

Dimensions & Load Charts

All dimensions in mm unless noted

GENERAL ARRANGEMENT – RMAX 40 M, Ø4,000 MM PEDESTAL

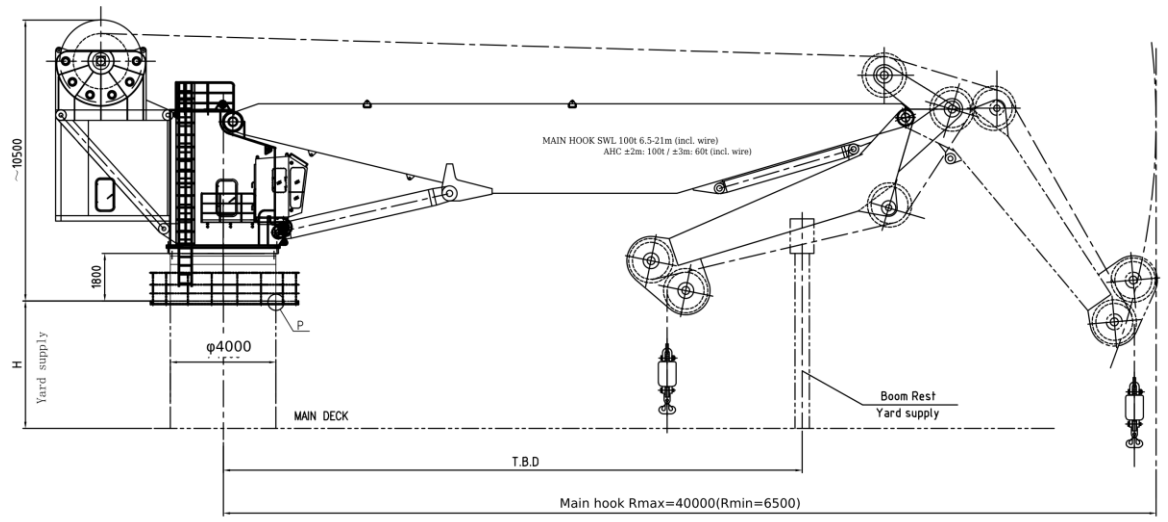

LOAD RATING CHART (INDICATIVE)

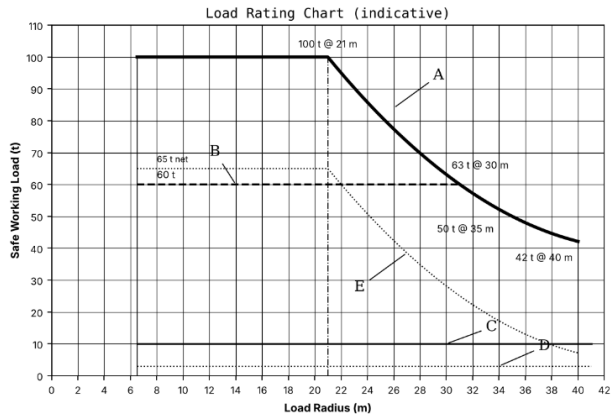

A – MAIN SWL incl. wire: offboard Hs ≤ 2.0 m / AHC ±2 m
B – MAIN AHC ±3 m (Hs 3.0 m), SWL 60 t incl. wire
E – MAIN Net payload @ 2,000 m (A – 35 t wire/hook)
C – AUX Offboard lift Hs ≤ 2.0 m D – AUX Personnel
AHC rated Tz 8–12 s with N2 assist (≥10 s without);
Tz < 8 s: SWL × Tz/8 (PLC auto-limit)

WORKING ENVELOPE – SWL (T), AHC ±2 M

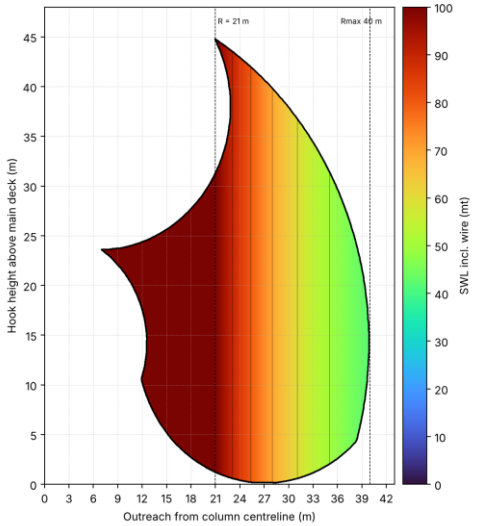

Talk to our team

Dimension designs and delivers offshore lifting, cable lay and launch & recovery equipment, from concept and class approval through fabrication, testing and after-sales support.

BD@dimension.sg
www.dimension.sg

Specifications are indicative and subject to change without notice. Final performance depends on product properties, vessel interface and project-specific engineering. © Dimension Consultants Pte. Ltd.