OFFSHORE LIFTING & SUBSEA DEPLOYMENT

DKB100s Offshore AHC Knuckle Boom Crane

A pedestal-mounted 100 t crane with active heave compensation for offshore lifting and subsea deployment.

100 t	6–35 m	1,000 tm	±100 mm
MAIN HOOK SWL	OUTREACH	LIFTING MOMENT	AHC ACCURACY
at 10 m outreach	Aux hook to 36 m	Nominal	Up to ~72 m/min line speed

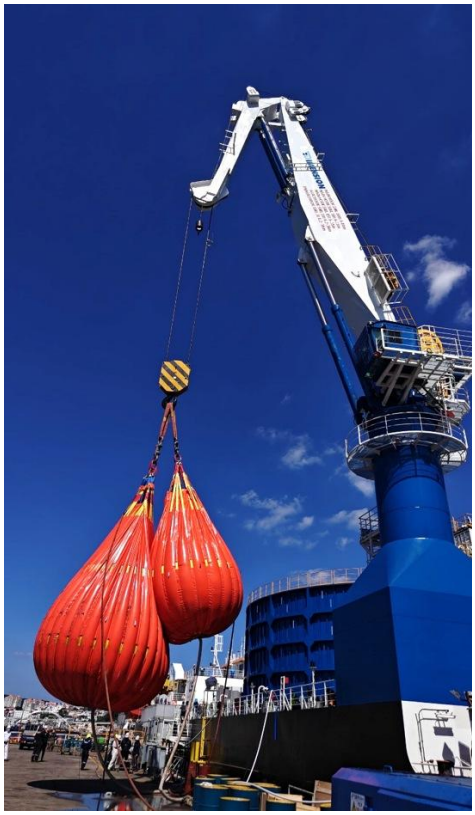

Overview

The Dimension DKB100s (shallow water AHC) is engineered for safe, efficient lifting in demanding marine environments. Its articulated knuckle boom and advanced hydraulic controls give the operator fine load control on deck and over the side.

Active Heave Compensation (AHC), driven by a motion reference unit, compensates for vessel motion at the boom tip, so heavy loads land accurately on the seabed in higher sea states.

Key Features

100 t lifting capacity
100 t at 10 m, 50 t at 15 m and 15 t at 35 m on the main hook, plus a 10 t auxiliary hook rated for personnel lifting (3 t).

Active Heave Compensation
MRU-controlled AHC with ±100 mm maximum deviation, line speeds up to ~72 m/min, and nitrogen-accumulator energy recovery.

Safety first
AOPS and MOPS overload protection safeguard personnel and equipment. Constant-tension mode included.

Ergonomic operator cabin
Climate-controlled cabin with joystick controls and a real-time HMI for load, reach and system monitoring.

Built for offshore life
Multi-layer marine coating, fully enclosed hydraulic and electrical systems, and corrosion-resistant materials.

Class ready
Designed and built to DNV, ABS, BV and API 2C requirements.

Applications

- **Subsea installation & construction** – positioning manifolds, templates and wellhead equipment
- **Pipe & cable lay support** – handling tensioners, reels and deck gear
- **Offshore wind** – component transfer, foundation work and maintenance support
- **Ship-to-ship transfer** – cargo handling between vessels at sea
- **Oil & gas intervention** – platform supply, well intervention and deepwater retrieval

Technical Specification

DKB100s Offshore AHC Knuckle Boom Crane

PERFORMANCE & DESIGN

Crane type	Pedestal-mounted knuckle boom crane with AHC
Main hook SWL	100 t @ 10 m 50 t @ 15 m · 15 t @ 35 m
Auxiliary hook SWL	10 t @ 36 m (cargo) 3 t @ 36 m (personnel lifting)
Nominal lifting moment	1,000 tm
Slewing	360° continuous, 0–0.6 rpm
Luffing / knuckling time	120 s / 120 s
Column diameter	3.2 m
Foundation height	5.0 m
Design codes	BV NR526 / API 2C / ABS CRC / DNV

MAIN WINCH – HARBOUR / OFFSHORE LIFT

Winch type	Hydraulically driven
Main wire	Ø48 mm compacted, rotation resistant 34(W)×K19S-EPWSC
Hoisting speed	0–20 m/min (0–50 t) Max. 20 reducing to 10 m/min (50–100 t), load dependent
Installed power	~2 × 200 kW + 2 × 11 kW

ENVIRONMENTAL & OPERATING LIMITS

In-service wind	25 m/s
Out-of-service wind (stowed)	63 m/s
List / trim	5° / 2°
Offboard lift rating	Sea state 4 (Hs 1.5 m)

MAIN WINCH – AHC PERFORMANCE

Drum groove	Lebus helix groove
Design heave / period	±1.5 m (9–12 s)
Line velocity	Up to ~72 m/min
AHC max. deviation	±100 mm
High-speed mode	25 t at boom tip, 72 m/min
Energy recovery	Nitrogen accumulator assist
Motion reference	Motion Reference Unit (MRU)

POWER, CONTROL & SAFETY

Electric supply	440 V, 3-phase, 60 Hz
HPU motor drive	Soft starter
Control system	PLC with HMI, real-time diagnostics and performance data
Control positions	Operator cabin and local panel Radio remote control optional
Monitoring	Real-time load, wind and wave sensors
Operating modes	Constant tension (CT), AHC
Overload protection	AOPS and MOPS emergency release
Corrosion protection	Multi-layer offshore coating system

Specifications are indicative and subject to change without notice. Final performance depends on product properties, vessel interface and project-specific engineering.

Dimensions & Load Charts

All dimensions in mm unless noted

GENERAL ARRANGEMENT – SIDE ELEVATION

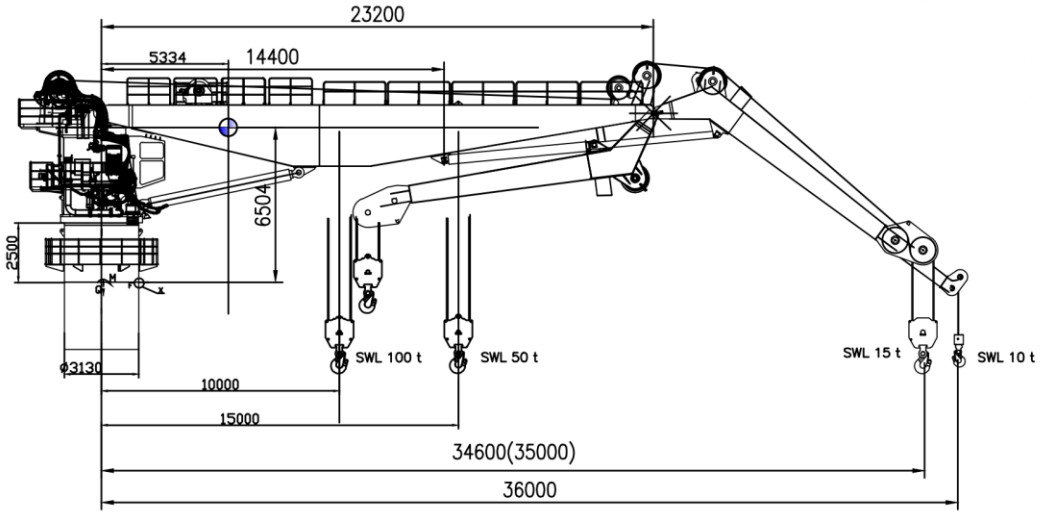

LOAD RATING CHART

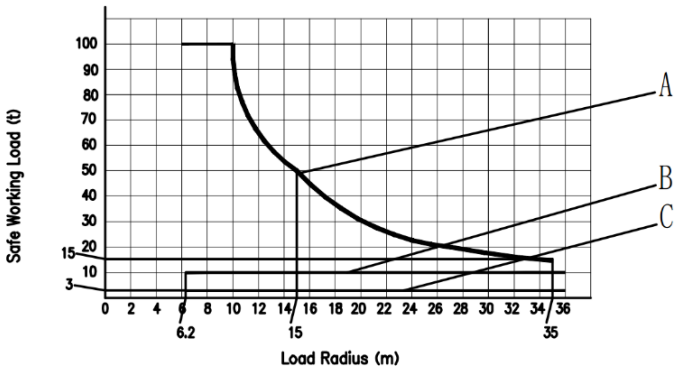

A Main hoist – onboard / offboard lift (sea state 4, Hs 1.5 m)
B Auxiliary hoist – onboard / offboard lift (sea state 4, Hs 1.5 m)
C Auxiliary hoist – personnel lifting

WORKING ENVELOPE – SWL (T)

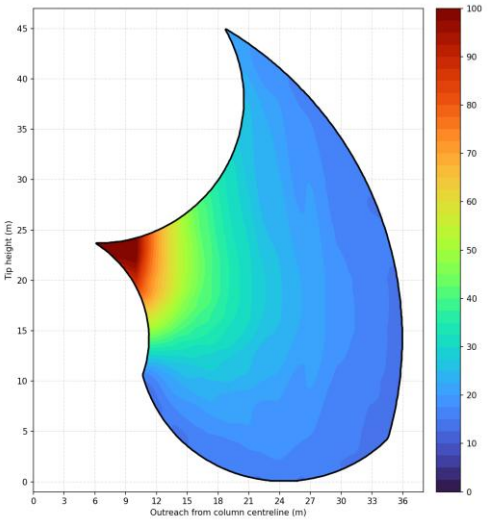

Tip height versus outreach from column centreline (m). Colour scale shows safe working load in tonnes.

Talk to our team

Dimension designs and delivers offshore lifting, cable lay and launch & recovery equipment, from concept and class approval through fabrication, testing and after-sales support.

BD@dimension.sg
www.dimension.sg

Specifications are indicative and subject to change without notice. Final performance depends on product properties, vessel interface and project-specific engineering. © Dimension Consultants Pte. Ltd.