HEAVY OFFSHORE LIFTING & DEEPWATER DEPLOYMENT

DKB150 Offshore AHC Knuckle Boom Crane

A pedestal-mounted 150 t single-fall crane with active heave compensation for heavy offshore lifting and subsea deployment to 2,000 m.

150 t	6.5–37 m	2,100 tm	2,000 m
MAIN HOOK SWL	OUTREACH	LIFTING MOMENT	WATER DEPTH
at 14 m, single fall	Aux hook to 38 m	Nominal	Standard drum, 3,000 m option



Overview

The Dimension DKB150 is a heavy-duty knuckle boom crane for demanding offshore lifts and deepwater subsea work. Its articulated boom and advanced hydraulic controls give the operator fine load control on deck and over the side.

Active Heave Compensation (AHC), driven by a motion reference unit, compensates for vessel motion at the boom tip. Ratings are top tension on a single fall including the hanging wire (NOV / MacGregor convention); net payload at depth is shown in the specification.

Key Features

150 t lifting capacity
150 t at 14 m on a single fall, 60 t at 23 m and 20 t at 37 m on the main hook, plus a 60 t auxiliary hoist and a 20 t constant-tension / man-riding hoist.

Active Heave Compensation
Compensates ±1.9 m heave at 12 s with 150 t at 60 m/min, or ±3 m at 10 s with up to 75 t at ~120 m/min; ±150 mm accuracy and nitrogen-accumulator energy recovery.

Deepwater main winch
2,000 m of Ø77 mm non-rotating wire (MBL ≈5,250 kN, design factor 3.6 at 150 t) on a Lebus helix-grooved drum, driven by ~1,850 kW of installed power; 3,000 m drum optional.

Safety first
AOPS and MOPS overload protection safeguard personnel and equipment. Constant-tension mode included.

Built for offshore life
Climate-controlled cabin with real-time HMI, multi-layer marine coating, and fully enclosed hydraulic and electrical systems.

Class ready
Designed and built to DNV, ABS, BV and API 2C requirements.

Applications

- **Subsea installation & construction** – deepwater manifolds, templates and wellhead equipment
- **Pipe & cable lay support** – handling tensioners, reels and deck gear
- **Offshore wind** – component transfer, foundation work and maintenance support
- **Ship-to-ship transfer** – cargo handling between vessels at sea
- **Oil & gas intervention** – platform supply, well intervention and deepwater retrieval

Technical Specification

DKB150 Offshore AHC Knuckle Boom Crane

PERFORMANCE & DESIGN

Crane type	Pedestal-mounted knuckle boom crane with AHC
Main hook SWL DAF 1.33	150 t @ 14 m (single fall) 60 t @ 23 m · 20 t @ 37 m
Auxiliary hook SWL	60 t @ 23 m (cargo) 20 t @ 37 m (constant tension / man-riding)
Nominal lifting moment	2,100 tm
Slewing	360° continuous, 0–0.5 rpm
Luffing / knuckling time	120 s / 120 s
Column diameter	4.0 m
Foundation height	5.0 m
Crane weight	≈343 t incl. 2,000 m wire and pedestal
Design codes	BV NR526 / API 2C / ABS CRC / DNV

ENVIRONMENTAL & OPERATING LIMITS

In-service wind	25 m/s
Out-of-service wind (stowed)	63 m/s
List / trim	5° / 2°

MAIN WINCH – AHC

Winch type	Hydraulically driven
Drum capacity	2,000 m standard (3,000 m option)
Main wire	Ø77 mm compacted, non-rotating, MBL ≈5,250 kN
Drum groove	Lebus helix groove
Design heave / period	±1.9 m @ 12 s (150 t) · ±3 m @ 10 s (≤75 t)
Line velocity	Up to ~120 m/min
AHC max. deviation	±150 mm
Low-speed mode	150 t top tension incl. wire, 60 m/min
AHC net payload at depth	≈121 t @ 1,000 m · ≈95 t @ 2,000 m
High-speed mode	75 t, up to ~120 m/min
Energy recovery	Nitrogen accumulator assist
Motion reference	Motion Reference Unit (MRU)
Installed power	~1,850 kW (5 × 260 kW AHC + 550 kW HPU)

POWER, CONTROL & SAFETY

Electric supply	440 V or 690 V, 3-phase, 60 Hz
HPU motor drive	Soft starter
Control system	PLC with HMI, real-time diagnostics and performance data
Control positions	Operator cabin and local panel Radio remote control optional
Monitoring	Real-time load, wind and wave sensors
Operating modes	Constant tension (CT), AHC, high-speed AHC
Overload protection	AOPS and MOPS emergency release
Corrosion protection	Multi-layer offshore coating system

Specifications are indicative and subject to change without notice. Final performance depends on product properties, vessel interface and project-specific engineering.

Dimensions & Load Charts

All dimensions in mm unless noted

GENERAL ARRANGEMENT – RMAX 37 M, Ø4,000 MM PEDESTAL

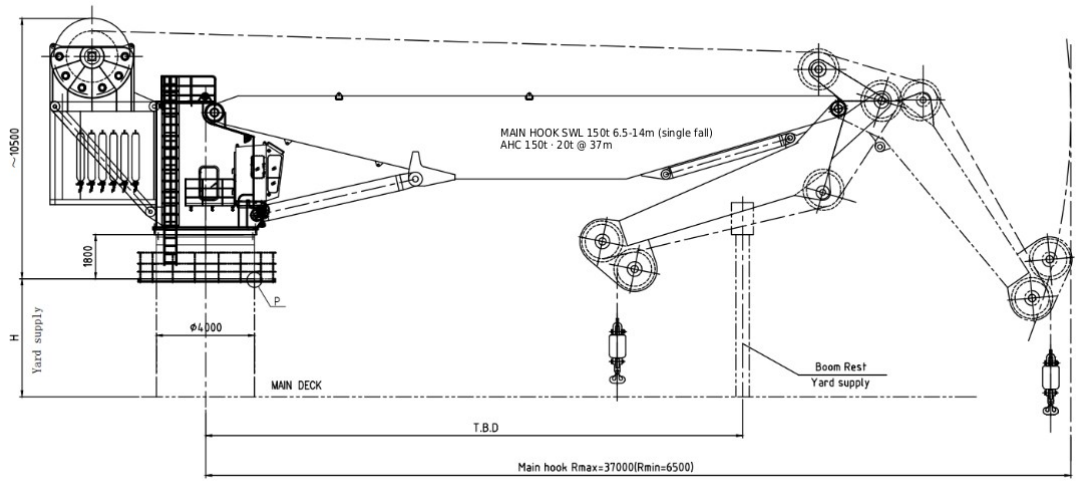

DKB150 Rev A · 05-Nov-2026 · indicative GA (geometry schematic)

LOAD–RADIUS CURVES – SINGLE FALL, DAF 1.33

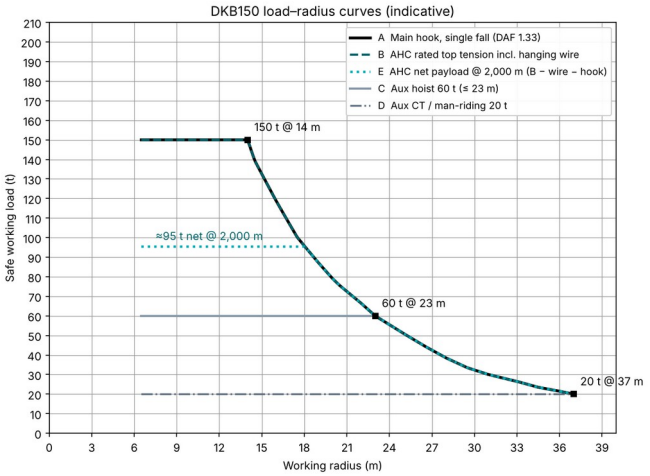

WORKING ENVELOPE – MAIN HOOK, SINGLE FALL (T)

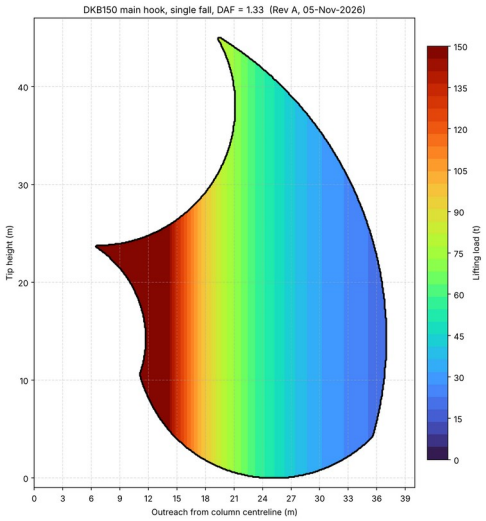

Talk to our team

Dimension designs and delivers offshore lifting, cable lay and launch & recovery equipment, from concept and class approval through fabrication, testing and after-sales support.

BD@dimension.sg
www.dimension.sg

Specifications are indicative and subject to change without notice. Final performance depends on product properties, vessel interface and project-specific engineering. © Dimension Consultants Pte. Ltd.