HEAVY OFFSHORE LIFTING & DEEPWATER DEPLOYMENT

DKB165 Offshore AHC Knuckle Boom Crane

A pedestal-mounted 165 t crane with active heave compensation for heavy offshore lifting and subsea deployment to 3,000 m.

165 t	6.5–37 m	2,000 tm	3,000 m
MAIN HOOK SWL	OUTREACH	LIFTING MOMENT	WATER DEPTH
at 12.5 m outreach	Aux hook to 38 m	Nominal	Drum capacity up to 3,000 m



Overview

The Dimension DKB165 is a heavy-duty knuckle boom crane for demanding offshore lifts and deepwater subsea work. Its articulated boom and advanced hydraulic controls give the operator fine load control on deck and over the side.

Active Heave Compensation (AHC), driven by a motion reference unit, compensates for vessel motion at the boom tip, so heavy loads can be landed accurately on the seabed in higher sea states.

Key Features

165 t lifting capacity
165 t at 12.5 m, 60 t at 23 m and 20 t at 37 m on the main hook, plus a 10 t auxiliary hook rated for personnel lifting (3 t).

Active Heave Compensation
Compensates ±3 to ~4 m heave with ±150 mm accuracy: 100 t at 60 m/min or 55 t at 85 m/min, with nitrogen-accumulator energy recovery.

Deepwater main winch
Up to 3,000 m of Ø84 mm non-rotating wire on a Lebus helix-grooved drum, driven by ~1,600 kW of installed power.

Safety first
AOPS and MOPS overload protection safeguard personnel and equipment. Constant-tension mode included.

Built for offshore life
Climate-controlled cabin with real-time HMI, multi-layer marine coating, and fully enclosed hydraulic and electrical systems.

Class ready
Designed and built to DNV, ABS, BV and API 2C requirements.

Applications

- **Subsea installation & construction** – deepwater manifolds, templates and wellhead equipment
- **Pipe & cable lay support** – handling tensioners, reels and deck gear
- **Offshore wind** – component transfer, foundation work and maintenance support
- **Ship-to-ship transfer** – cargo handling between vessels at sea
- **Oil & gas intervention** – platform supply, well intervention and deepwater retrieval

Technical Specification

DKB165 Offshore AHC Knuckle Boom Crane

PERFORMANCE & DESIGN

Crane type	Pedestal-mounted knuckle boom crane with AHC
Main hook SWL DAF 1.33	165 t @ 12.5 m 60 t @ 23 m · 20 t @ 37 m
Auxiliary hook SWL	10 t @ 38 m (cargo) 3 t @ 38 m (personnel lifting)
Nominal lifting moment	2,000 tm
Slewing	360° continuous, 0–0.5 rpm
Luffing / knuckling time	120 s / 120 s
Column diameter	4.0 m
Foundation height	5.0 m
Design codes	BV NR526 / API 2C / ABS CRC / DNV

ENVIRONMENTAL & OPERATING LIMITS

In-service wind	25 m/s
Out-of-service wind (stowed)	63 m/s
List / trim	5° / 2°

MAIN WINCH – AHC

Winch type	Hydraulically driven
Drum capacity	Up to 3,000 m
Main wire	Ø84 mm compacted, non-rotating
Drum groove	Lebus helix groove
Design heave / period	±3 to ~4 m (9–12 s)
Line velocity	Up to ~120 m/min
AHC max. deviation	±150 mm
Low-speed mode	100 t at boom tip, 60 m/min
High-speed mode	55 t at boom tip, 85 m/min
Energy recovery	Nitrogen accumulator assist
Motion reference	Motion Reference Unit (MRU)
Installed power	~1,600 kW

POWER, CONTROL & SAFETY

Electric supply	440 V or 690 V, 3-phase, 60 Hz
HPU motor drive	Soft starter
Control system	PLC with HMI, real-time diagnostics and performance data
Control positions	Operator cabin and local panel Radio remote control optional
Monitoring	Real-time load, wind and wave sensors
Operating modes	Constant tension (CT), AHC
Overload protection	AOPS and MOPS emergency release
Corrosion protection	Multi-layer offshore coating system

Specifications are indicative and subject to change without notice. Final performance depends on product properties, vessel interface and project-specific engineering.

Dimensions & Load Charts

All dimensions in mm unless noted

GENERAL ARRANGEMENT – RMAX 37 M, Ø4,000 MM PEDESTAL

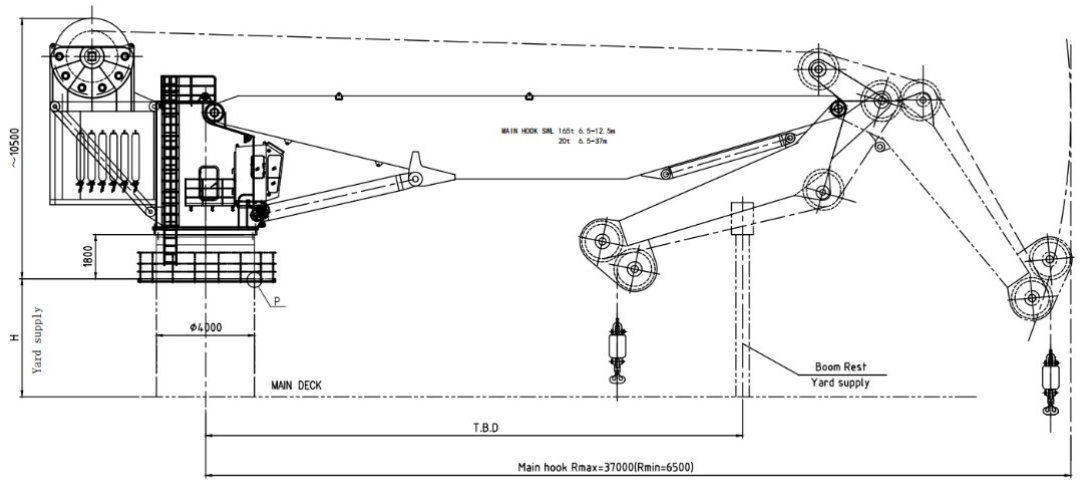

LOAD–RADIUS CURVE – MAIN HOOK, DAF 1.33

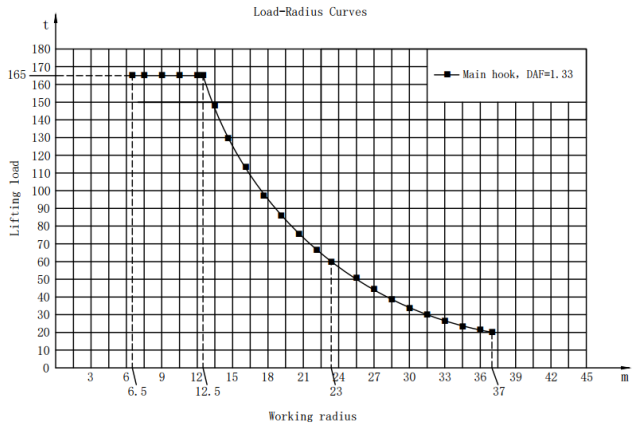

WORKING ENVELOPE – MAIN HOOK (T)

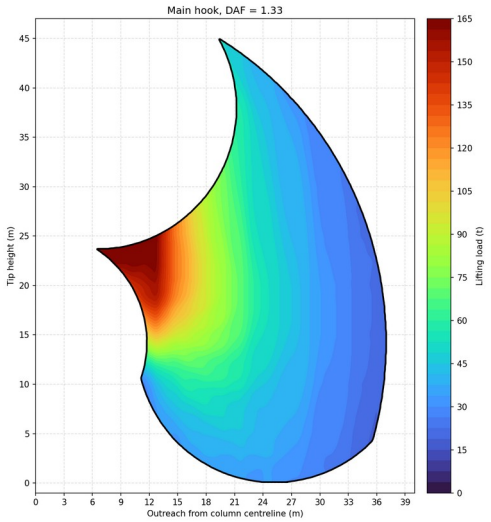

Talk to our team

Dimension designs and delivers offshore lifting, cable lay and launch & recovery equipment, from concept and class approval through fabrication, testing and after-sales support.

BD@dimension.sg
www.dimension.sg

Specifications are indicative and subject to change without notice. Final performance depends on product properties, vessel interface and project-specific engineering. *© Dimension Consultants Pte. Ltd.*